SINCE 1842

CASE CONSTRUCTION

## E SERIES

# WHEELED EXCAVATORS

WX155E SR | WX175E SR

# SPECIFICATIONS
## WX155E SR

### ENGINE

| | |
|---|---|
| Model | Cummins B4.5 |
| Type | Water-cooled, 4-cycle diesel, 4-cylinder in line, High pressure common rail system (electric control), turbocharger with air cooled intercooler, DOC+DPF+SCR, EGR free. |
| Emissions | Stage V |
| Number of cylinders / Displacement (l) | 4 / 4.5 |
| Bore and stroke (mm) | 107 x 124 |
| **Rated flywheel horse power** | |
| ISO 9249 (kW) | 127 at 2200 $min^{-1}$ (rpm) |
| ISO 14396 (kW) | 129 at 2200 $min^{-1}$ (rpm) |
| **Maximum torque** | |
| ISO 14396 (Nm) | 780 at 1500 $min^{-1}$ (rpm) |

### HYDRAULIC SYSTEM

| | |
|---|---|
| Main pump | Variable displacement piston pump |
| Max. oil flow (l/min) | 260 at 1800 $min^{-1}$ |
| **Working circuit pressure** | |
| Boom/Arm/Bucket (MPa) | 34.3 - 37.3 with auto power boost |
| Swing circuit (MPa) | 25.2 |
| Travel circuit (MPa) | 39.2 |
| Pilot circuit (MPa) | 3.9 |
| **Boom cylinders** | |
| Bore (mm) | 105 |
| Stroke (mm) | 1105 |
| **Boom positioning (2 piece boom only)** | |
| Bore (mm) | 145 |
| Stroke (mm) | 634 |
| **Arm cylinder** | |
| Bore (mm) | 115 |
| Stroke (mm) | 1138 |
| **Bucket cylinder** | |
| Bore (mm) | 100 |
| Stroke (mm) | 850 |

### SWING

| | |
|---|---|
| Swing motor | Fixed displacement radial piston motor |
| Maximum swing speed ($min^{-1}$) | 9.5 |
| Swing torque (Nm) | 39,100 |
| Brake system | Automatic, spring applied hydraulic released |

### ELECTRICAL SYSTEM

| | |
|---|---|
| Voltage (V) | 24 |
| Alternator (Amp) | 95 |
| Starter (V - kW) | 24 - 4.8 |
| Battery | 2 X 12 V 100 Ah |

### STEERING

| | |
|---|---|
| Type | Orbitrol steering system |
| Minimum turning radius (m) | 6.3 |

### AXLES

| | |
|---|---|
| Type | 4 wheel drive with differential, oscillating front axle with automatic or operator controlled oscillation lock, fixed rear axle |
| Brake type | Wet multi-disc |
| Parking brake type | Wet multi-disc integrated in transmission |

### UNDERCARRIAGE

| | |
|---|---|
| Transmission | 2 speed hydrostatic powershift |
| Travel motor | Variable displacement bent-axis axial piston motor |
| High travel speed (Automatic travel speed shifting) (km/h) | 35 |
| Low travel speed (km/h) | 10 |
| Creep speed (km/h) | 3 |
| Drawbar pull (kN) | 91 |
| Gradeability | 58% (30°) |

### NOISE

| | |
|---|---|
| External guaranteed sound level (EU Directive 2000/14/EC) | LwA 100 dB(A) |
| Operator cab sound pressure level (ISO 6396) | LpA 71 dB(A) |

### CIRCUIT AND COMPONENT CAPACITIES

| | |
|---|---|
| Fuel tank (l) | 200 |
| Hydraulic system (l) | 187 |
| Hydraulic tank (l) | 103 |
| AdBlue tank (l) | 48 |

# DIMENSIONS
## WX155E SR MONO

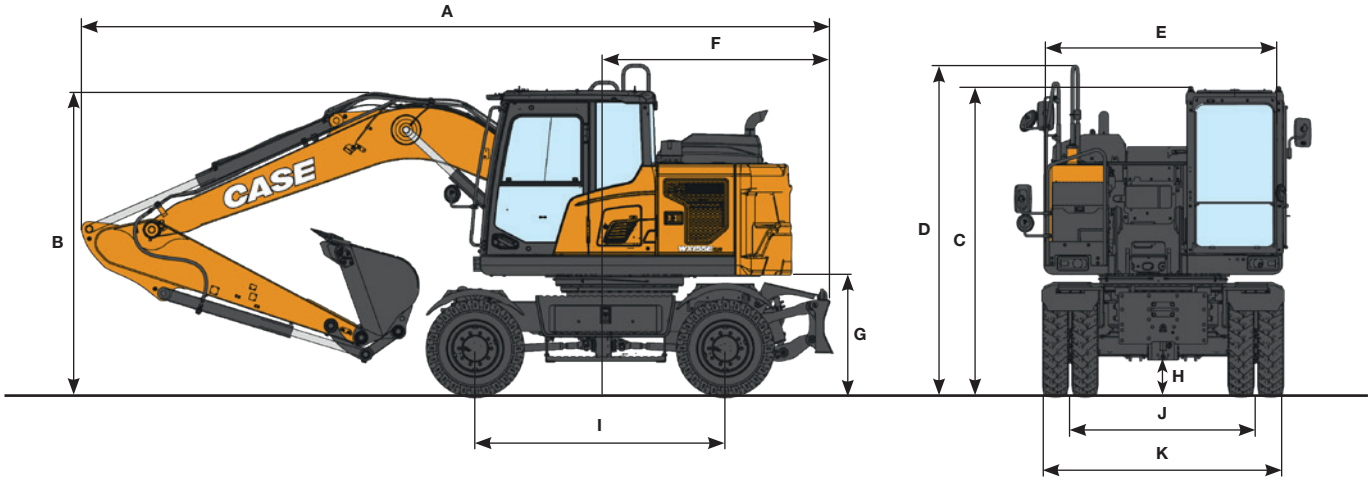


| GENERAL DIMENSIONS | | Arm 2.45 m | Arm 2.00 m | Arm 2.60 m |
|---|---|---|---|---|
| A Overall length (with attachment) (traveling/transportation) | mm | 7210 / 7360 | 7385 / 7310 | 7110 / 7380 |
| B Overall height (to top of boom) (traveling/transportation) | mm | 3790 / 2990 | 3270 / 2820 | 3930 / 3110 |
| C Cab height | mm | 3230 | 3230 | 3230 |
| D Overall height (to top of handrail) | mm | 3450 | 3450 | 3450 |
| E Upper structure overall width | mm | 2510 | 2510 | 2510 |
| F Swing (rear end) radius | mm | 1800 | 1800 | 1800 |
| G Clearance height under upper structure | mm | 1265 | 1265 | 1265 |
| H Minimum ground clearance | mm | 370 | 370 | 370 |
| I Wheel base (center to center of wheels) | mm | 2600 | 2600 | 2600 |
| J Tread | mm | 1944 | 1944 | 1944 |
| K Undercarriage overall width | mm | 2530 | 2530 | 2530 |

### WEIGHT

With 2.45 m arm, 0.58 m³ bucket, 10.00×20 twin tires, operator, lubricant, coolant, full fuel tank.

| MONO | WEIGHT |
|---|---|
| Rear blade | 16870 kg |
| Front blade and rear stabilizers | 18090 kg |

Counterweigh: 3250 kg

| PERFORMANCE DATA | | Arm 2.45 m | Arm 2.00 m | Arm 2.60 m |
|---|---|---|---|---|
| Boom length | mm | 4600 | 4600 | 4600 |
| A Maximum reach at GRP | mm | 8150 | 7710 | 8300 |
| B Maximum reach | mm | 8370 | 7940 | 8520 |
| C Max. digging depth | mm | 5130 | 4680 | 5280 |
| D Max. digging height | mm | 8830 | 8520 | 8920 |
| E Max. dumping height | mm | 6380 | 6080 | 6470 |
| F Min. swing radius | mm | 2740 | 2650 | 2755 |

| DIGGING FORCE (ISO 6015) | | Arm 2.45 m | Arm 2.00 m | Arm 2.60 m |
|---|---|---|---|---|
| Arm digging force | kN | 66 | 78 | 64 |
| with Auto power up | kN | 72 | 85 | 69 |
| Bucket digging force | kN | 103 | 103 | 103 |
| with Auto power up | kN | 112 | 112 | 112 |

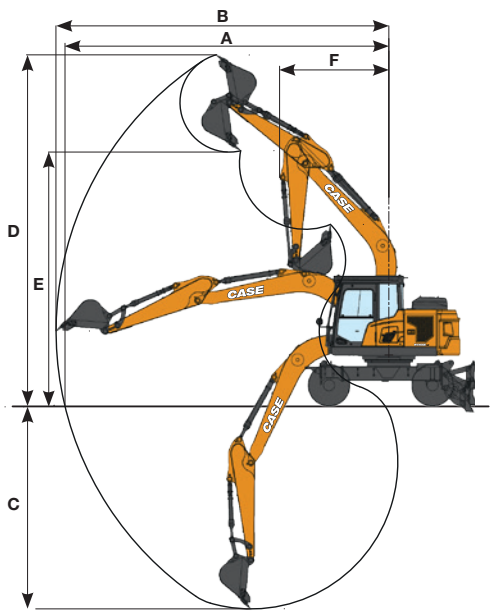

# LIFTING CAPACITY
## WX155E SR MONO

| REACH | 1.5 m | | 3.0 m | | 4.5 m | | 6.0 m | | At max reach | | |
|---|---|---|---|---|---|---|---|---|---|---|---|
| Front / Side | | | | | | | | | | | m |

**REAR BLADE DOWN** - Mono boom 4.6 m, arm 2.00 m, 3250 kg counterweight

| | | | | | | | | | | | |
|---|---|---|---|---|---|---|---|---|---|---|---|
| 6.0 m | | | | | 4420* | 4350 | | | 3340* | 3340* | 5.19 |
| 4.5 m | | | | | 4810* | 4240 | 3870* | 2710 | 3120* | 2610 | 6.13 |
| 3.0 m | | | | | 5800* | 4020 | 4190 | 2640 | 3150* | 2290 | 6.59 |
| 1.5 m | | | | | 6280 | 3800 | 4090 | 2550 | 3380* | 2190 | 6.68 |
| 0 m | | | 6020* | 6020* | 6150 | 3680 | 4030 | 2500 | 3670 | 2290 | 6.42 |
| -1.5 m | 6310* | 6310* | 9650* | 6750 | 6150 | 3680 | | | 4310 | 2670 | 5.74 |
| -3.0 m | | | 7160* | 6940 | | | | | 4610* | 3860 | 4.46 |

**REAR BLADE UP** - Mono boom 4.6 m, arm 2.00 m, 3250 kg counterweight

| | | | | | | | | | | | |
|---|---|---|---|---|---|---|---|---|---|---|---|
| 6.0 m | | | | | 4420* | 3930 | | | 3340* | 3100 | 5.19 |
| 4.5 m | | | | | 4810* | 3830 | 3870* | 2440 | 3120* | 2350 | 6.13 |
| 3.0 m | | | | | 5800* | 3610 | 4190 | 2380 | 3150* | 2050 | 6.59 |
| 1.5 m | | | | | 6280 | 3390 | 4090 | 2290 | 3380* | 1970 | 6.68 |
| 0 m | | | 6020* | 5860 | 6150 | 3280 | 4030 | 2240 | 3670 | 2050 | 6.42 |
| -1.5 m | 6310* | 6310* | 9650* | 5920 | 6150 | 3280 | | | 4310 | 2390 | 5.74 |
| -3.0 m | | | 7160* | 6090 | | | | | 4610* | 3450 | 4.46 |

**REAR BLADE DOWN** - Mono boom 4.6 m, arm 2.45 m, 3250 kg counterweight

| | | | | | | | | | | | |
|---|---|---|---|---|---|---|---|---|---|---|---|
| 7.5 m | | | | | | | | | 2900* | 2900* | 4.19 |
| 6.0 m | | | | | | | | | 2400* | 2400* | 5.74 |
| 4.5 m | | | | | 4340* | 4300 | 3870* | 2740 | 2250* | 2250* | 6.60 |
| 3.0 m | | | 8000* | 7500 | 5370* | 4060 | 4200 | 2650 | 2260* | 2060 | 7.03 |
| 1.5 m | | | 5100* | 5100* | 6300 | 3810 | 4080 | 2540 | 2410* | 1980 | 7.12 |
| 0 m | | | 6320* | 6320* | 6130 | 3660 | 4000 | 2470 | 2730* | 2050 | 6.87 |
| -1.5 m | 5450* | 5450* | 10200* | 6650 | 6090 | 3620 | 3990 | 2460 | 3420* | 2340 | 6.24 |
| -3.0 m | | | 8180* | 6800 | 5500* | 3700 | | | 4460* | 3140 | 5.10 |

**REAR BLADE UP** - Mono boom 4.6 m, arm 2.45 m, 3250 kg counterweight

| | | | | | | | | | | | |
|---|---|---|---|---|---|---|---|---|---|---|---|
| 7.5 m | | | | | | | | | 2900* | 2900* | 4.19 |
| 6.0 m | | | | | | | | | 2400* | 2400* | 5.74 |
| 4.5 m | | | | | 4340* | 3880 | 3870* | 2740 | 2250* | 2100 | 6.60 |
| 3.0 m | | | 8000* | 6630 | 5370* | 3640 | 4200 | 2380 | 2260* | 1850 | 7.03 |
| 1.5 m | | | 5100* | 5100* | 6300 | 3400 | 4080 | 2280 | 2410* | 1780 | 7.12 |
| 0 m | | | 6320* | 5800 | 6130 | 3260 | 4000 | 2200 | 2730* | 1840 | 6.87 |
| -1.5 m | 5450* | 5450* | 10200* | 5820 | 6090 | 3220 | 3990 | 2200 | 3420* | 2090 | 6.24 |
| -3.0 m | | | 8180* | 5960 | 5500* | 3300 | | | 4460* | 2810 | 5.10 |

* The above loads (kg) are compliant to the ISO standards and refer to the excavator equipped without bucket. The indicated loads are no more than 87% of hydraulic system lift capacity or 75% of static tipping load. Values marked with an asterisk (*) are limited by the hydraulic lifting capacity.

| REACH | | | | | | | | | | | |
|---|---|---|---|---|---|---|---|---|---|---|---|
| Front / Side | 1.5 m | | 3.0 m | | 4.5 m | | 6.0 m | | At max reach | | m |

**FRONT BLADE & REAR STABILIZERS DOWN** - Mono boom 4.6 m, arm 2.45 m, 3250 kg counterweight

| | | | | | | | | | | | |
|---|---|---|---|---|---|---|---|---|---|---|---|
| 7.5 m | | | | | | | | | 2900* | 2900* | 4.19 |
| 6.0 m | | | | | | | | | 2400* | 2400* | 5.74 |
| 4.5 m | | | | | 4340 | 4340* | 3870* | 3870* | 2250* | 2250* | 6.60 |
| 3.0 m | | | 8000* | 8000* | 5370* | 5370* | 4420* | 4420* | 2260* | 2260* | 7.03 |
| 1.5 m | | | 5100* | 5100* | 6450* | 6450* | 4870* | 4400 | 2410* | 2410* | 7.12 |
| 0 m | | | 6320* | 6320* | 7010* | 6630 | 5120* | 4320 | 2730* | 2730* | 6.87 |
| -1.5 m | 5450* | 5450* | 10200* | 10200* | 6820* | 6590 | 4820* | 4310 | 3420* | 3420* | 6.24 |
| -3.0 m | | | 8180* | 8180* | 5500* | 5500* | | | 4460* | 4460* | 5.10 |

**FRONT BLADE & REAR STABILIZERS UP** - Mono boom 4.6 m, arm 2.45 m, 3250 kg counterweight

| | | | | | | | | | | | |
|---|---|---|---|---|---|---|---|---|---|---|---|
| 7.5 m | | | | | | | | | 2900* | 2900* | 4.19 |
| 6.0 m | | | | | | | | | 2400* | 2400* | 5.74 |
| 4.5 m | | | | | 4340* | 4340* | 3870* | 3150 | 2250* | 2250* | 6.60 |
| 3.0 m | | | 8000* | 8000* | 5370* | 4680 | 4250 | 3060 | 2260* | 2260* | 7.03 |
| 1.5 m | | | 5100* | 5100* | 6380 | 4420 | 4130 | 2950 | 2410* | 2310 | 7.12 |
| 0 m | | | 6320* | 6320* | 6210 | 4270 | 4050 | 2870 | 2730* | 2400 | 6.87 |
| -1.5 m | 5450* | 5450* | 10200 | 7860 | 6170 | 4230 | 4040 | 2860 | 3420* | 2730 | 6.24 |
| -3.0 m | | | 8180* | 8010 | 5500* | 4320 | | | 4460* | 3660 | 5.10 |

**REAR BLADE DOWN** - Mono boom 4.6 m, arm 2.60 m, 3250 kg counterweight

| | | | | | | | | | | | |
|---|---|---|---|---|---|---|---|---|---|---|---|
| 7.5 m | | | | | | | | | 2670* | 2670* | 4.43 |
| 6.0 m | | | | | | | | | 2230* | 2230* | 5.92 |
| 4.5 m | | | | | 4190* | 4190* | 3770* | 2750 | 2100* | 2100* | 6.76 |
| 3.0 m | | | 7640* | 7570 | 5230* | 4080 | 4210 | 2660 | 2120* | 2000 | 7.18 |
| 1.5 m | | | 5810* | 5810* | 6310 | 3820 | 4080 | 2540 | 2250* | 1920 | 7.26 |
| 0 m | | | 6390* | 6390* | 6130 | 3650 | 3990 | 2460 | 2540* | 1990 | 7.01 |
| -1.5 m | 5220* | 5220* | 10050* | 6610 | 6070 | 3610 | 3970 | 2440 | 3130* | 2250 | 6.40 |
| -3.0 m | 9280* | 9280* | 8470* | 6750 | 5700* | 3670 | | | 4400* | 2960 | 5.30 |

**REAR BLADE UP** - Mono boom 4.6 m, arm 2.60 m, 3250 kg counterweight

| | | | | | | | | | | | |
|---|---|---|---|---|---|---|---|---|---|---|---|
| 7.5 m | | | | | | | | | 2670* | 2670* | 4.43 |
| 6.0 m | | | | | | | | | 2230* | 2230* | 5.92 |
| 4.5 m | | | | | 4190* | 3900 | 3770* | 2480 | 2100* | 2030 | 6.76 |
| 3.0 m | | | 7640* | 6690 | 5230* | 3660 | 4210 | 2390 | 2120* | 1800 | 7.18 |
| 1.5 m | | | 5810* | 5810* | 6310 | 3410 | 4080 | 2280 | 2250* | 1720 | 7.26 |
| 0 m | | | 6390* | 5780 | 6130 | 3250 | 3990 | 2200 | 2540* | 1780 | 7.01 |
| -1.5 m | 5220* | 5220* | 10050* | 5780 | 6070 | 3200 | 3970 | 2180 | 3130* | 2010 | 6.40 |
| -3.0 m | 9280* | 9280* | 8470* | 5910 | 5700* | 3270 | | | 4400* | 2650 | 5.30 |

* The above loads (kg) are compliant to the ISO standards and refer to the excavator equipped without bucket. The indicated loads are no more than 87% of hydraulic system lift capacity or 75% of static tipping load. Values marked with an asterisk (*) are limited by the hydraulic lifting capacity.

# BUCKETS
## WX155E SR MONO

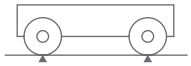

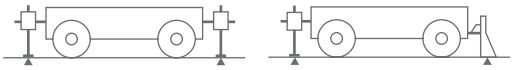

### QUICK COUPLED - ON WHEELS

| Capacity m³ (ISO7451 HEAPED) | Width mm | Weight kg | Arm 2.00 m | Arm 2.45 m 2.60 m |
|---|---|---|---|---|
| **GENERAL PURPOSE BUCKETS** | | | | |
| 0.21 | 450 | 250 | ○ | ○ |
| 0.31 | 600 | 290 | ○ | ○ |
| 0.41 | 750 | 330 | ○ | ○ |
| 0.52 | 900 | 360 | ○ | ● |
| 0.58 | 1000 | 400 | ● | ● |
| 0.66 | 1100 | 430 | ● | ▲ |
| 0.73 | 1200 | 450 | ▲ | ■ |

| Capacity m³ (ISO7451 HEAPED) | Width mm | Weight kg | Arm 2.00 m | Arm 2.45 m 2.60 m |
|---|---|---|---|---|
| **HEAVY DUTY BUCKETS** | | | | |
| 0.21 | 450 | 350 | ○ | ○ |
| 0.31 | 600 | 400 | ○ | ○ |
| 0.42 | 750 | 460 | ○ | ○ |
| 0.45 | 800 | 470 | ○ | ○ |
| 0.52 | 900 | 510 | ○ | ● |
| 0.60 | 1000 | 550 | ● | ▲ |
| 0.67 | 1100 | 580 | ▲ | ■ |

| Capacity m³ (ISO7451 HEAPED) | Width mm | Weight* kg | Arm 2.00 m | Arm 2.45 m 2.60 m |
|---|---|---|---|---|
| **GRADING BUCKETS** | | | | |
| 0.59 | 1500 | 440 | ○ | ● |
| 0.72 | 1800 | 510 | ● | ■ |
| 0.80 | 2000 | 550 | ■ | ■ |

| Capacity m³ (ISO7451 HEAPED) | Width mm | Weight* kg | Arm 2.00 m | Arm 2.45 m 2.60 m |
|---|---|---|---|---|
| **DITCH CLEANING BUCKETS** | | | | |
| 0.54 | 1830 | 480 | ○ | ● |

### QUICK COUPLED - STABILIZED

| Capacity m³ (ISO7451 HEAPED) | Width mm | Weight kg | Arm 2.00 m | Arm 2.45 m 2.60 m |
|---|---|---|---|---|
| **GENERAL PURPOSE BUCKETS** | | | | |
| 0.21 | 450 | 250 | ○ | ○ |
| 0.31 | 600 | 290 | ○ | ○ |
| 0.41 | 750 | 330 | ○ | ○ |
| 0.52 | 900 | 360 | ○ | ○ |
| 0.58 | 1000 | 400 | ○ | ● |
| 0.66 | 1100 | 430 | ● | ▲ |
| 0.73 | 1200 | 450 | ▲ | ▲ |

| Capacity m³ (ISO7451 HEAPED) | Width mm | Weight kg | Arm 2.00 m | Arm 2.45 m 2.60 m |
|---|---|---|---|---|
| **HEAVY DUTY BUCKETS** | | | | |
| 0.21 | 450 | 350 | ○ | ○ |
| 0.31 | 600 | 400 | ○ | ○ |
| 0.42 | 750 | 460 | ○ | ○ |
| 0.45 | 800 | 470 | ○ | ○ |
| 0.52 | 900 | 510 | ○ | ○ |
| 0.60 | 1000 | 550 | ○ | ● |
| 0.67 | 1100 | 580 | ● | ▲ |

| Capacity m³ (ISO7451 HEAPED) | Width mm | Weight* kg | Arm 2.00 m | Arm 2.45 m 2.60 m |
|---|---|---|---|---|
| **GRADING BUCKETS** | | | | |
| 0.59 | 1500 | 440 | ○ | ● |
| 0.72 | 1800 | 510 | ● | ● |
| 0.80 | 2000 | 550 | ● | ▲ |

| Capacity m³ (ISO7451 HEAPED) | Width mm | Weight* kg | Arm 2.00 m | Arm 2.45 m 2.60 m |
|---|---|---|---|---|
| **DITCH CLEANING BUCKETS** | | | | |
| 0.54 | 1830 | 480 | ○ | ○ |

○ Rated material density up to 2 ton/m³
● Rated material density up to 1.6 ton/m³
▲ Rated material density up to 1.4 ton/m³
■ Rated material density up to 1.2 ton/m³

* with bolt-on cutting edge

# DIMENSIONS
## WX155E SR 2-PIECE BOOM

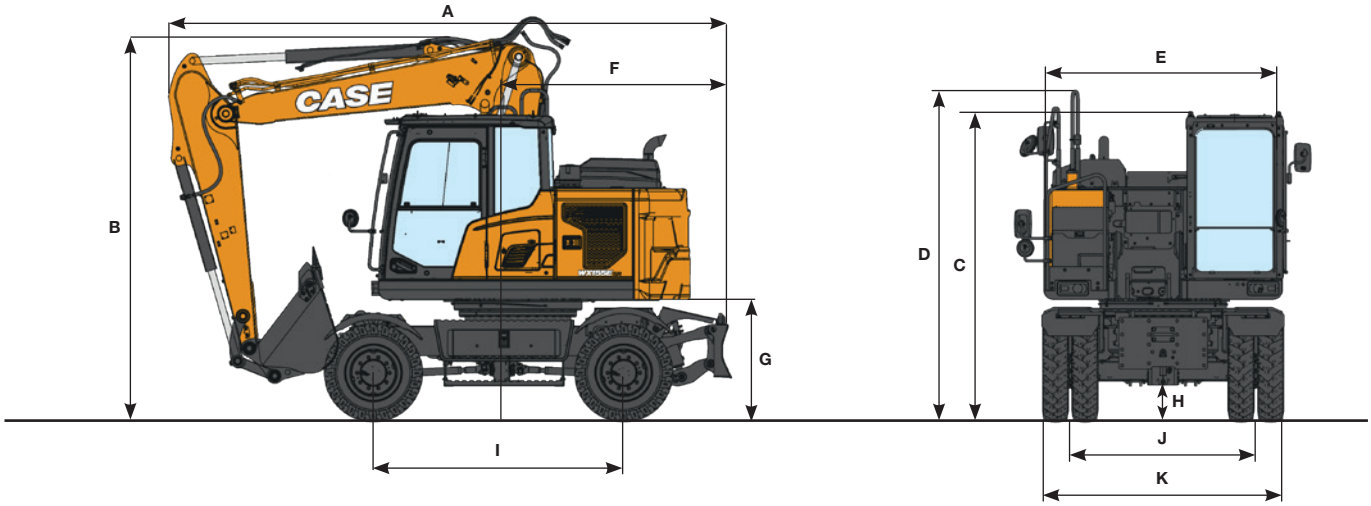


| GENERAL DIMENSIONS | | Arm 2.45 m | Arm 2.00 m | Arm 2.60 m |
|---|---|---|---|---|
| A Overall length (with attachment) (traveling/transportation) | mm | 5440 / 7480 | 5480 / 7470 | 5420 / 7490 |
| B Overall height (to top of boom) (traveling/transportation) | mm | 4000 / 2990 | 4000 / 2940 | 4000 / 3040 |
| C Cab height | mm | 3230 | 3230 | 3230 |
| D Overall height (to top of handrail) | mm | 3450 | 3450 | 3450 |
| E Upper structure overall width | mm | 2510 | 2510 | 2510 |
| F Swing (rear end) radius | mm | 1800 | 1800 | 1800 |
| G Clearance height under upper structure | mm | 1265 | 1265 | 1265 |
| H Minimum ground clearance | mm | 370 | 370 | 370 |
| I Wheel base (center to center of wheels) | mm | 2600 | 2600 | 2600 |
| J Tread | mm | 1944 | 1944 | 1944 |
| K Undercarriage overall width | mm | 2530 | 2530 | 2530 |

### WEIGHT

With 2.45 m arm, 0.58 m³ bucket, 10.00×20 twin tires, operator, lubricant, coolant, full fuel tank.

| 2-PIECE BOOM | WEIGHT |
|---|---|
| Rear blade | 17170 kg |
| Front blade and rear stabilizers | 18390 kg |

Counterweight: 3250 kg

| PERFORMANCE DATA | | Arm 2.45 m | Arm 2.00 m | Arm 2.60 m |
|---|---|---|---|---|
| Boom length | mm | 4748 | 4748 | 4748 |
| A Maximum reach at GRP | mm | 8340 | 7890 | 8490 |
| B Maximum reach | mm | 8550 | 8110 | 8700 |
| C Max. digging depth | mm | 5020 | 4570 | 5170 |
| D Max. digging height | mm | 9460 | 9110 | 9580 |
| E Max. dumping height | mm | 6970 | 6630 | 7090 |
| F Min. swing radius | mm | 2670 | 2660 | 2710 |

| DIGGING FORCE (ISO 6015) | | Arm 2.45 m | Arm 2.00 m | Arm 2.60 m |
|---|---|---|---|---|
| Arm digging force | kN | 66 | 78 | 64 |
| with Auto power up | kN | 72 | 85 | 69 |
| Bucket digging force | kN | 103 | 103 | 103 |
| with Auto power up | kN | 112 | 112 | 112 |

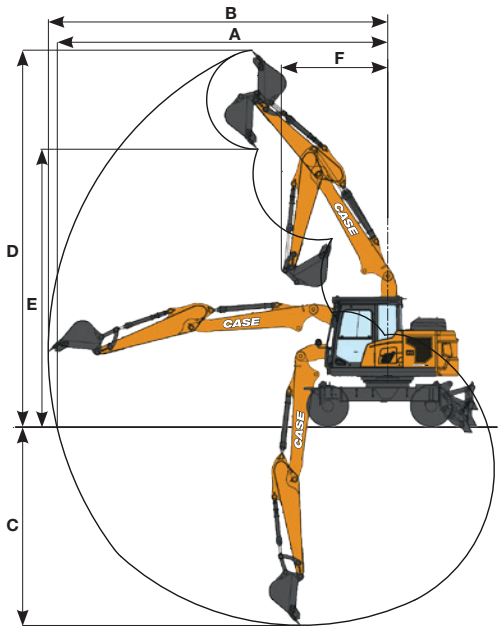

# LIFTING CAPACITY
## WX155E SR 2-PIECE BOOM

| | REACH | | | | | | | | |
|---|---|---|---|---|---|---|---|---|---|
| Front / Side | 3.0 m | | 4.5 m | | 6.0 m | | At max reach | | m |

**REAR BLADE DOWN** - 2-piece boom 4.748 m, arm 2.0 m, 3250 kg counterweight

| | | | | | | | | | |
|---|---|---|---|---|---|---|---|---|---|
| 7.5 m | | | | | | | 4440* | 4440* | 3.71 |
| 6.0 m | | | 4210* | 4210* | | | 3480* | 3200 | 5.41 |
| 4.5 m | 5850* | 5850* | 4650* | 4240 | 4240* | 2710 | 3210* | 2470 | 6.32 |
| 3.0 m | | | 5640* | 3990 | 4190 | 2630 | 3180* | 2180 | 6.77 |
| 1.5 m | | | 6270 | 3760 | 4080 | 2530 | 3350* | 2090 | 6.86 |
| 0 m | | | 6140 | 3640 | 4020 | 2470 | 3530 | 2190 | 6.60 |
| -1.5 m | 9690* | 6710 | 6140 | 3640 | | | 4110 | 2530 | 5.94 |

**REAR BLADE UP** - 2-piece boom 4.748 m, arm 2.0 m, 3250 kg counterweight

| | | | | | | | | | |
|---|---|---|---|---|---|---|---|---|---|
| 7.5 m | | | | | | | 4440* | 4440* | 3.71 |
| 6.0 m | | | 4210* | 3940 | | | 3480* | 2880 | 5.41 |
| 4.5 m | 5850* | 5850* | 4650* | 3820 | 4240* | 2440 | 3210* | 2220 | 6.32 |
| 3.0 m | | | 5640* | 3570 | 4190 | 2360 | 3180* | 1950 | 6.77 |
| 1.5 m | | | 6270 | 3350 | 4080 | 2260 | 3350* | 1870 | 6.86 |
| 0 m | | | 6140 | 3240 | 4020 | 2210 | 3530 | 1950 | 6.60 |
| -1.5 m | 9690* | 5860 | 6140 | 3240 | | | 4110 | 2260 | 5.94 |

**REAR BLADE DOWN** - 2-piece boom 4.748 m, arm 2.45 m, 3250 kg counterweight

| | | | | | | | | | |
|---|---|---|---|---|---|---|---|---|---|
| 7.5 m | | | | | | | 3050* | 3050* | 4.49 |
| 6.0 m | | | 3710* | 3710* | | | 2510* | 2510* | 5.97 |
| 4.5 m | | | 4210* | 4210* | 3880* | 2730 | 2330* | 2210 | 6.80 |
| 3.0 m | | | 5230* | 4040 | 4200 | 2630 | 2310* | 1970 | 7.21 |
| 1.5 m | | | 6290 | 3770 | 4080 | 2520 | 2410* | 1890 | 7.30 |
| 0 m | 4890* | 4890* | 6120 | 3620 | 3990 | 2440 | 2670* | 1960 | 7.05 |
| -1.5 m | 8930* | 6600 | 6080 | 3590 | 3980 | 2430 | 3210* | 2230 | 6.45 |

**REAR BLADE UP** - 2-piece boom 4.748 m, arm 2.45 m, 3250 kg counterweight

| | | | | | | | | | |
|---|---|---|---|---|---|---|---|---|---|
| 7.5 m | | | | | | | 3050* | 3050* | 4.49 |
| 6.0 m | | | 3710* | 3710* | | | 2510* | 2480 | 5.97 |
| 4.5 m | | | 4210* | 3870 | 3880* | 2460 | 2330* | 1980 | 6.80 |
| 3.0 m | | | 5230* | 3620 | 4200 | 2360 | 2310* | 1760 | 7.21 |
| 1.5 m | | | 6290 | 3360 | 4080 | 2250 | 2410* | 1690 | 7.30 |
| 0 m | 4890* | 4890* | 6120 | 3210 | 3990 | 2180 | 2670* | 1750 | 7.05 |
| -1.5 m | 8930* | 5760 | 6080 | 3180 | 3980 | 2160 | 3210* | 1980 | 6.45 |

* The above loads (kg) are compliant to the ISO standards and refer to the excavator equipped without bucket. The indicated loads are no more than 87% of hydraulic system lift capacity or 75% of static tipping load. Values marked with an asterisk (*) are limited by the hydraulic lifting capacity.

| REACH | | | | | | | | | |
|---|---|---|---|---|---|---|---|---|---|
| Front / Side | 3.0 m | | 4.5 m | | 6.0 m | | At max reach | | m |

**FRONT BLADE & REAR STABILIZERS DOWN** - 2-piece boom 4.748 m, arm 2.45 m, 3250 kg counterweight

| | | | | | | | | | |
|---|---|---|---|---|---|---|---|---|---|
| 7.5 m | | | | | | | 3050* | 3050* | 4.49 |
| 6.0 m | | | 3710* | 3710* | | | 2510* | 2510* | 5.97 |
| 4.5 m | | | 4210* | 4210* | 3880* | 3880* | 2330* | 2330* | 6.80 |
| 3.0 m | | | 5230* | 5230* | 4270* | 4270* | 2310* | 2310* | 7.21 |
| 1.5 m | | | 6300* | 6300* | 4740* | 4400 | 2410* | 2410* | 7.30 |
| 0 m | 4890* | 4890* | 6890* | 6620 | 5040* | 4310 | 2670* | 2670* | 7.05 |
| -1.5 m | 8930* | 8930* | 6800* | 6580 | 4870* | 4300 | 3210* | 3210* | 6.45 |

**FRONT BLADE & REAR STABILIZERS UP** - 2-piece boom 4.748 m, arm 2.45 m, 3250 kg counterweight

| | | | | | | | | | |
|---|---|---|---|---|---|---|---|---|---|
| 7.5 m | | | | | | | 3050* | 3050* | 4.49 |
| 6.0 m | | | 3710* | 3710* | | | 2510* | 2510* | 5.97 |
| 4.5 m | | | 4210* | 4210* | 3880* | 3150 | 2330* | 2330* | 6.80 |
| 3.0 m | | | 5230* | 4660 | 4260 | 3050 | 2310* | 2290 | 7.21 |
| 1.5 m | | | 6300* | 4390 | 4130 | 2930 | 2410* | 2210 | 7.30 |
| 0 m | 4890* | 4890* | 6200 | 4230 | 4040 | 2850 | 2670* | 2290 | 7.05 |
| -1.5 m | 8930* | 7810 | 6160 | 4200 | 4030 | 2840 | 3210* | 2600 | 6.45 |

**REAR BLADE DOWN** - 2-piece boom 4.748 m, arm 2.60 m, 3250 kg counterweight

| | | | | | | | | | |
|---|---|---|---|---|---|---|---|---|---|
| 7.5 m | | | 3420* | 3420* | | | 2810* | 2810* | 4.73 |
| 6.0 m | | | 3560* | 3560* | 2880* | 2760 | 2330* | 2330* | 6.15 |
| 4.5 m | | | 4060* | 4060* | 3780* | 2750 | 2170* | 2130 | 6.95 |
| 3.0 m | 7590* | 7510 | 5090* | 4060 | 4180* | 2640 | 2160* | 1910 | 7.36 |
| 1.5 m | | | 6200* | 3780 | 4080 | 2520 | 2250* | 1840 | 7.44 |
| 0 m | 4980* | 4980* | 6110 | 3610 | 3990 | 2430 | 2480* | 1900 | 7.20 |
| -1.5 m | 8600* | 6560 | 6060 | 3570 | 3960 | 2420 | 2960* | 2140 | 6.61 |
| -3.0 m | | | 5860* | 3640 | | | | | |

**REAR BLADE UP** - 2-piece boom 4.748 m, arm 2.60 m, 3250 kg counterweight

| | | | | | | | | | |
|---|---|---|---|---|---|---|---|---|---|
| 7.5 m | | | 3420* | 3420* | | | 2810* | 2810* | 4.73 |
| 6.0 m | | | 3560* | 3560* | 2880* | 2490 | 2330* | 2330* | 6.15 |
| 4.5 m | | | 4060* | 3900 | 3780* | 2470 | 2170* | 1910 | 6.95 |
| 3.0 m | 7590* | 6620 | 5090* | 3640 | 4180* | 2370 | 2160* | 1710 | 7.36 |
| 1.5 m | | | 6200* | 3370 | 4080 | 2250 | 2250* | 1640 | 7.44 |
| 0 m | 4980* | 4980* | 6110 | 3200 | 3990 | 2170 | 2480* | 1690 | 7.20 |
| -1.5 m | 8600* | 5720 | 6060 | 3160 | 3960 | 2150 | 2960* | 1910 | 6.61 |
| -3.0 m | | | 5860* | 3230 | | | | | |

* The above loads (kg) are compliant to the ISO standards and refer to the excavator equipped without bucket. The indicated loads are no more than 87% of hydraulic system lift capacity or 75% of static tipping load. Values marked with an asterisk (*) are limited by the hydraulic lifting capacity.

# BUCKETS
## WX155E SR 2-PIECE BOOM

### QUICK COUPLED - ON WHEELS

| Capacity m³ (ISO7451 HEAPED) | Width mm | Weight kg | Arm 2.00 m | Arm 2.45 m 2.60 m |
|---|---|---|---|---|
| **GENERAL PURPOSE BUCKETS** | | | | |
| 0.21 | 450 | 250 | ○ | ○ |
| 0.31 | 600 | 290 | ○ | ○ |
| 0.41 | 750 | 330 | ○ | ○ |
| 0.52 | 900 | 360 | ○ | ● |
| 0.58 | 1000 | 400 | ● | ▲ |
| 0.66 | 1100 | 430 | ▲ | ■ |
| 0.73 | 1200 | 450 | ■ | ■ |

| Capacity m³ (ISO7451 HEAPED) | Width mm | Weight kg | Arm 2.00 m | Arm 2.45 m 2.60 m |
|---|---|---|---|---|
| **HEAVY DUTY BUCKETS** | | | | |
| 0.21 | 450 | 350 | ○ | ○ |
| 0.31 | 600 | 400 | ○ | ○ |
| 0.42 | 750 | 460 | ○ | ○ |
| 0.45 | 800 | 470 | ○ | ● |
| 0.52 | 900 | 510 | ● | ▲ |
| 0.60 | 1000 | 550 | ▲ | ■ |
| 0.67 | 1100 | 580 | ■ | ■ |

| Capacity m³ (ISO7451 HEAPED) | Width mm | Weight* kg | Arm 2.00 m | Arm 2.45 m 2.60 m |
|---|---|---|---|---|
| **GRADING BUCKETS** | | | | |
| 0.59 | 1500 | 440 | ● | ● |
| 0.72 | 1800 | 510 | ▲ | ■ |
| 0.80 | 2000 | 550 | ■ | - |

| Capacity m³ (ISO7451 HEAPED) | Width mm | Weight* kg | Arm 2.00 m | Arm 2.45 m 2.60 m |
|---|---|---|---|---|
| **DITCH CLEANING BUCKETS** | | | | |
| 0.54 | 1830 | 480 | ○ | ● |

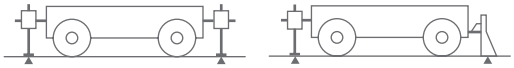

### QUICK COUPLED - STABILIZED

| Capacity m³ (ISO7451 HEAPED) | Width mm | Weight kg | Arm 2.00 m | Arm 2.45 m 2.60 m |
|---|---|---|---|---|
| **GENERAL PURPOSE BUCKETS** | | | | |
| 0.21 | 450 | 250 | ○ | ○ |
| 0.31 | 600 | 290 | ○ | ○ |
| 0.41 | 750 | 330 | ○ | ○ |
| 0.52 | 900 | 360 | ○ | ● |
| 0.58 | 1000 | 400 | ● | ● |
| 0.66 | 1100 | 430 | ● | ▲ |
| 0.73 | 1200 | 450 | ▲ | ■ |

| Capacity m³ (ISO7451 HEAPED) | Width mm | Weight kg | Arm 2.00 m | Arm 2.45 m 2.60 m |
|---|---|---|---|---|
| **HEAVY DUTY BUCKETS** | | | | |
| 0.21 | 450 | 350 | ○ | ○ |
| 0.31 | 600 | 400 | ○ | ○ |
| 0.42 | 750 | 460 | ○ | ○ |
| 0.45 | 800 | 470 | ○ | ● |
| 0.52 | 900 | 510 | ● | ● |
| 0.60 | 1000 | 550 | ● | ▲ |
| 0.67 | 1100 | 580 | ▲ | ■ |

| Capacity m³ (ISO7451 HEAPED) | Width mm | Weight* kg | Arm 2.00 m | Arm 2.45 m 2.60 m |
|---|---|---|---|---|
| **GRADING BUCKETS** | | | | |
| 0.59 | 1500 | 440 | ○ | ● |
| 0.72 | 1800 | 510 | ● | ▲ |
| 0.80 | 2000 | 550 | ▲ | ■ |

| Capacity m³ (ISO7451 HEAPED) | Width mm | Weight* kg | Arm 2.00 m | Arm 2.45 m 2.60 m |
|---|---|---|---|---|
| **DITCH CLEANING BUCKETS** | | | | |
| 0.54 | 1830 | 480 | ○ | ○ |

○ Rated material density up to 2 ton/m³
● Rated material density up to 1.6 ton/m³
▲ Rated material density up to 1.4 ton/m³
■ Rated material density up to 1.2 ton/m³

* with bolt-on cutting edge

# SPECIFICATIONS
## WX175E SR

### ENGINE

| | |
|---|---|
| Model | Cummins B4.5 |
| Type | Water-cooled, 4-cycle diesel, 4-cylinder in line, High pressure common rail system (electric control), turbocharger with air cooled intercooler, DOC+DPF+SCR, EGR free. |
| Emissions | Stage V |
| Number of cylinders / Displacement (l) | 4 / 4.5 |
| Bore and stroke (mm) | 107 x 124 |
| **Rated flywheel horse power** | |
| ISO 9249 (kW) | 127 at 2200 $min^{-1}$ (rpm) |
| ISO 14396 (kW) | 129 at 2200 $min^{-1}$ (rpm) |
| **Maximum torque** | |
| ISO 14396 (Nm) | 780 at 1500 $min^{-1}$ (rpm) |

### HYDRAULIC SYSTEM

| | |
|---|---|
| Main pump | Variable displacement piston pump |
| Max. oil flow (l/min) | 260 at 1800 $min^{-1}$ |
| **Working circuit pressure** | |
| Boom/Arm/Bucket (MPa) | 34.3 - 37.3 with auto power boost |
| Swing circuit (MPa) | 26.5 |
| Travel circuit (MPa) | 37.3 |
| Pilot circuit (MPa) | 3.4 |
| **Boom cylinders** | |
| Bore (mm) | 110 |
| Stroke (mm) | 992 |
| **Boom positioning (2 piece boom only)** | |
| Bore (mm) | 160 |
| Stroke (mm) | 624 |
| **Arm cylinder** | |
| Bore (mm) | 120 |
| Stroke (mm) | 1235 |
| **Bucket cylinder** | |
| Bore (mm) | 105 |
| Stroke (mm) | 995 |

### SWING

| | |
|---|---|
| Swing motor | Fixed displacement radial piston motor |
| Maximum swing speed ($min^{-1}$) | 9.5 |
| Swing torque (Nm) | 39,100 |
| Brake system | Automatic, spring applied hydraulic released |

### ELECTRICAL SYSTEM

| | |
|---|---|
| Voltage (V) | 24 |
| Alternator (Amp) | 95 |
| Starter (V - kW) | 24 - 4.8 |
| Battery | 2 X 12 V 100 Ah |

### STEERING

| | |
|---|---|
| Type | Orbitrol steering system |
| Minimum turning radius (m) | 6.3 |

### AXLES

| | |
|---|---|
| Type | 4 wheel drive with differential, oscillating front axle with automatic or operator controlled oscillation lock, fixed rear axle |
| Brake type | Wet multi-disc |
| Parking brake type | Wet multi-disc integrated in transmission |

### UNDERCARRIAGE

| | |
|---|---|
| Transmission | 2 speed hydrostatic powershift |
| Travel motor | Variable displacement bent-axis axial piston motor |
| High travel speed (Automatic travel speed shifting) (km/h) | 35 |
| Low travel speed (km/h) | 10 |
| Creep speed (km/h) | 3 |
| Drawbar pull (kN) | 91 |
| Gradeability | 70% (35°) |

### NOISE

| | |
|---|---|
| External guaranteed sound level (EU Directive 2000/14/EC) | LwA 100 dB(A) |
| Operator cab sound pressure level (ISO 6396) | LpA 71 dB(A) |

### CIRCUIT AND COMPONENT CAPACITIES

| | |
|---|---|
| Fuel tank (l) | 200 |
| Hydraulic system (l) | 187 |
| Hydraulic tank (l) | 103 |
| AdBlue tank (l) | 48 |

# DIMENSIONS
## WX175E SR 2-PIECE BOOM

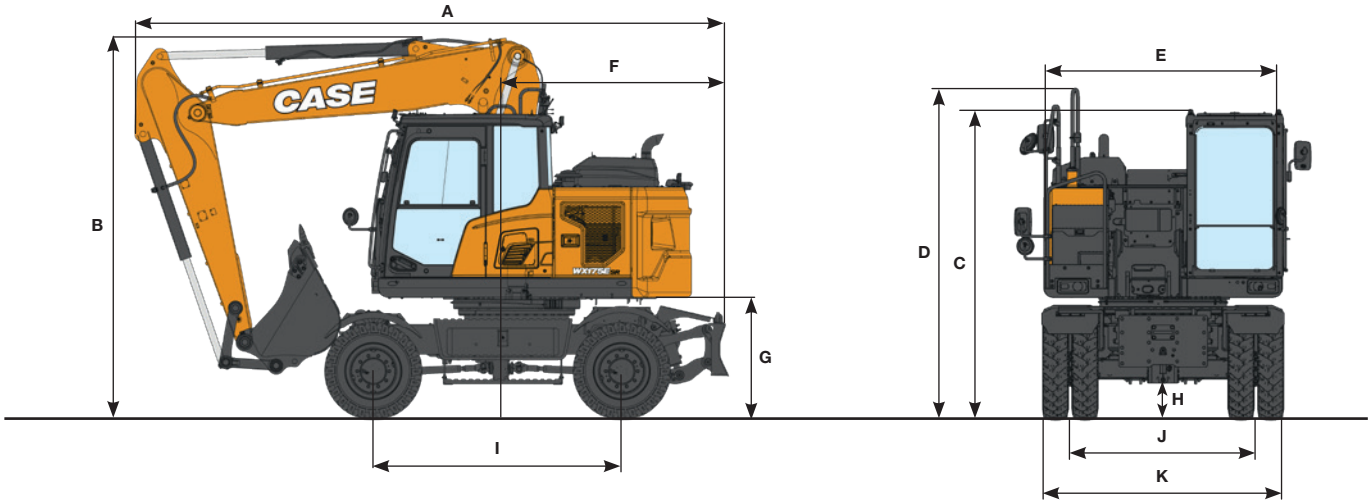


| GENERAL DIMENSIONS | | Arm 2.45 m | Arm 2.00 m | Arm 2.60 m |
|---|---|---|---|---|
| A Overall length (with attachment) (traveling/transportation) | mm | 6310 / 7860 | 6340 / 7900 | 6250 / 7820 |
| B Overall height (to top of boom) (traveling/transportation) | mm | 3940 / 2900 | 3940 / 2940 | 3960 / 3150 |
| C Cab height | mm | 3220 | 3220 | 3220 |
| D Overall height (to top of handrail) | mm | 3275 | 3275 | 3275 |
| E Upper structure overall width | mm | 2500 | 2500 | 2500 |
| F Swing (rear end) radius | mm | 1830 | 1830 | 1830 |
| G Clearance height under upper structure | mm | 1265 | 1265 | 1265 |
| H Minimum ground clearance | mm | 370 | 370 | 370 |
| I Wheel base (center to center of wheels) | mm | 2600 | 2600 | 2600 |
| J Tread | mm | 1944 / 2114 | 1944 / 2114 | 1944 / 2114 |
| K Undercarriage overall width | mm | 2530 | 2530 | 2530 |

### WEIGHT

With 2.45 m arm, 0.70 m³ bucket, 10.00×20 twin tires, operator, lubricant, coolant, full fuel tank.

| 2-PIECE BOOM | WEIGHT |
|---|---|
| Rear blade | 18820 kg |
| Front blade and rear stabilizers | 20040 kg |

Counterweight: 4200 kg

| PERFORMANCE DATA | | Arm 2.45 m | Arm 2.00 m | Arm 2.60 m |
|---|---|---|---|---|
| Boom length | mm | 5097 | 5097 | 5097 |
| A Maximum reach at GRP | mm | 8750 | 8280 | 8820 |
| B Maximum reach | mm | 8950 | 8490 | 9020 |
| C Max. digging depth | mm | 5440 | 4980 | 5565 |
| D Max. digging height | mm | 9785 | 9370 | 9680 |
| E Max. dumping height | mm | 7060 | 6660 | 6980 |
| F Min. swing radius | mm | 3040 | 3380 | 3500 |

| DIGGING FORCE (ISO 6015) | | Arm 2.45 m | Arm 2.00 m | Arm 2.60 m |
|---|---|---|---|---|
| Arm digging force | kN | 70 | 89 | 70 |
| with Auto power up | kN | 77 | 98 | 76 |
| Bucket digging force | kN | 115 | 115 | 115 |
| with Auto power up | kN | 125 | 125 | 126 |

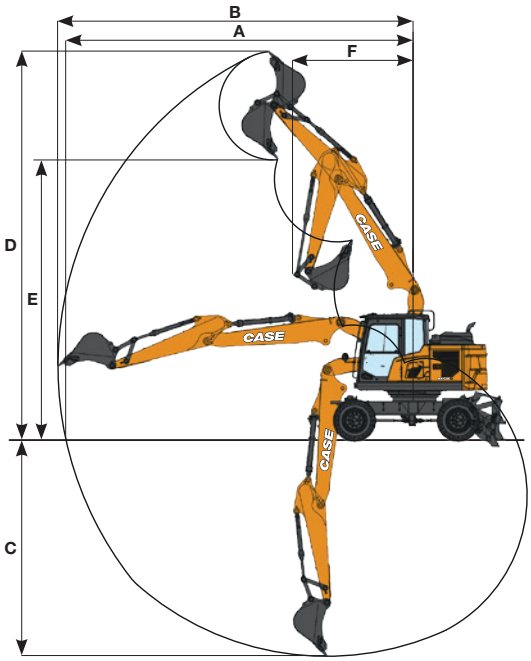

# LIFTING CAPACITY
## WX175E SR 2-PIECE BOOM

| | REACH | | | | | | | | | | |
|---|---|---|---|---|---|---|---|---|---|---|---|
| Front / Side | 3.0 m | | 4.5 m | | 6.0 m | | 7.5 m | | At max reach | | m |

**REAR BLADE DOWN** - 2-piece boom 5.097 m, arm 2.0 m, 4200 kg counterweight

| | | | | | | | | | | | |
|---|---|---|---|---|---|---|---|---|---|---|---|
| 7.5 m | | | | | | | | | 4790* | 4790* | 4.19 |
| 6.0 m | | | 4310* | 4310* | | | | | 4390* | 3240 | 5.75 |
| 4.5 m | | | 4930* | 4680 | 4350* | 3000 | | | 4000 | 2550 | 6.60 |
| 3.0 m | | | 6070* | 4350 | 4560 | 2880 | | | 3570 | 2250 | 7.03 |
| 1.5 m | | | 6770 | 4070 | 4430 | 2750 | | | 3450 | 2160 | 7.12 |
| 0 m | | | 6630 | 3940 | 4340 | 2680 | | | 3600 | 2240 | 6.87 |
| -1.5 m | 10340* | 7320 | 6630 | 3950 | 4360 | 2690 | | | 4140 | 2570 | 6.24 |

**REAR BLADE UP** - 2-piece boom 5.097 m, arm 2.0 m, 4200 kg counterweight

| | | | | | | | | | | | |
|---|---|---|---|---|---|---|---|---|---|---|---|
| 7.5 m | | | | | | | | | 4790* | 4790* | 4.19 |
| 6.0 m | | | 4310* | 4310* | | | | | 4390* | 2920 | 5.75 |
| 4.5 m | | | 4930* | 4220 | 4350* | 2700 | | | 4000 | 2290 | 6.60 |
| 3.0 m | | | 6070* | 3900 | 4560 | 2590 | | | 3570 | 2020 | 7.03 |
| 1.5 m | | | 6770 | 3620 | 4430 | 2460 | | | 3450 | 1930 | 7.12 |
| 0 m | | | 6630 | 3500 | 4340 | 2390 | | | 3600 | 2000 | 6.87 |
| -1.5 m | 10340* | 6400 | 6630 | 3510 | 4360 | 2400 | | | 4140 | 2290 | 6.24 |

**REAR BLADE DOWN** - 2-piece boom 5.097 m, arm 2.45 m, 4200 kg counterweight

| | | | | | | | | | | | |
|---|---|---|---|---|---|---|---|---|---|---|---|
| 7.5 m | | | 4040* | 4040* | | | | | 3280* | 3280* | 4.95 |
| 6.0 m | | | 3820* | 3820* | 3900* | 3070 | | | 2780* | 2780* | 6.31 |
| 4.5 m | | | 4470* | 4470* | 4010* | 3020 | | | 2600* | 2260 | 7.10 |
| 3.0 m | | | 5630* | 4410 | 4480* | 2880 | 2610* | 2020 | 2590* | 2020 | 7.50 |
| 1.5 m | | | 6770* | 4080 | 4420 | 2740 | 3180 | 1980 | 2700* | 1940 | 7.58 |
| 0 m | | | 6600 | 3910 | 4310 | 2640 | | | 2980* | 2010 | 7.35 |
| -1.5 m | 9110* | 7170 | 6560 | 3880 | 4280 | 2620 | | | 3530* | 2250 | 6.77 |
| -3.0 m | | | 6380* | 3970 | | | | | | | |

**REAR BLADE DOWN (WIDE AXLES)** - 2-piece boom 5.097 m, arm 2.45 m, 4200 kg counterweight

| | | | | | | | | | | | |
|---|---|---|---|---|---|---|---|---|---|---|---|
| 7.5 m | | | 4040* | 4040* | | | | | 3280* | 3280* | 4.95 |
| 6.0 m | | | 3820* | 3820* | 3900* | 3450 | | | 2780* | 2780* | 6.31 |
| 4.5 m | | | 4470* | 4470* | 4010* | 3400 | | | 2600* | 2560 | 7.10 |
| 3.0 m | | | 5630* | 5000 | 4480* | 3260 | 2610* | 2290 | 2590* | 2290 | 7.50 |
| 1.5 m | | | *6770* | 4670 | 4440 | 3110 | 3190 | 2250 | 2700* | 2210 | 7.58 |
| 0 m | | | 6630 | 4490 | 4330 | 3010 | | | 2980* | 2290 | 7.35 |
| -1.5 m | 9110* | 8420 | 6590 | 4460 | 4300 | 2990 | | | 3530* | 2570 | 6.77 |
| -3.0 m | | | 6380* | 4550 | | | | | | | |

**REAR BLADE UP** - 2-piece boom 5.097 m, arm 2.45 m, 4200 kg counterweight

| | | | | | | | | | | | |
|---|---|---|---|---|---|---|---|---|---|---|---|
| 7.5 m | | | 4040* | 4040* | | | | | 3280* | 3280* | 4.95 |
| 6.0 m | | | 3820* | 3820* | 3900* | 2770 | | | 2780* | 2510 | 6.31 |
| 4.5 m | | | 4470* | 4290 | 4010* | 2730 | | | 2600* | 2030 | 7.10 |
| 3.0 m | | | 5630* | 3950 | 4480* | 2590 | 2610* | 1810 | 2590* | 1810 | 7.50 |
| 1.5 m | | | 6770* | 3640 | 4420 | 2450 | 3180 | 1760 | 2700* | 1730 | 7.58 |
| 0 m | | | 6600 | 3470 | 4310 | 2350 | | | 2980* | 1790 | 7.35 |
| -1.5 m | 9110* | 6260 | 6560 | 3430 | 4280 | 2330 | | | 3530* | 2010 | 6.77 |
| -3.0 m | | | 6380* | 3520 | | | | | | | |

**REAR BLADE UP (WIDE AXLES)** - 2-piece boom 5.097 m, arm 2.45 m, 4200 kg counterweight

| | | | | | | | | | | | |
|---|---|---|---|---|---|---|---|---|---|---|---|
| 7.5 m | | | 4040* | 4040* | | | | | 3280* | 3280* | 4.95 |
| 6.0 m | | | 3820* | 3820* | 3900* | 3060 | | | 2780* | 2780* | 6.31 |
| 4.5 m | | | 4470* | 4470* | 4010* | 3010 | | | 2600* | 2250 | 7.10 |
| 3.0 m | | | 5630* | 4390 | 4480* | 2880 | 2610* | 2020 | 2590* | 2020 | 7.50 |
| 1.5 m | | | 6770* | 4070 | 4440 | 2730 | 3190 | 1970 | 2700* | 1940 | 7.58 |
| 0 m | | | 6630 | 3900 | 4330 | 2630 | | | 2980* | 2000 | 7.35 |
| -1.5 m | 9110* | 7140 | 6590 | 3870 | 4300 | 2610 | | | 3530* | 2250 | 6.77 |
| -3.0 m | | | 6380* | 3960 | | | | | | | |

* The above loads (kg) are compliant to the ISO standards and refer to the excavator equipped without bucket. The indicated loads are no more than 87% of hydraulic system lift capacity or 75% of static tipping load. Values marked with an asterisk (*) are limited by the hydraulic lifting capacity.

# LIFTING CAPACITY
## WX175E SR 2-PIECE BOOM

| | REACH | | | | | | | | | | |
|---|---|---|---|---|---|---|---|---|---|---|---|
| Front / Side | 3.0 m | | 4.5 m | | 6.0 m | | 7.5 m | | At max reach | | m |

**FRONT BLADE & REAR STABILIZERS DOWN** - 2-piece boom 5.097 m, arm 2.45 m, 4200 kg counterweight

| | | | | | | | | | | | |
|---|---|---|---|---|---|---|---|---|---|---|---|
| 7.5 m | | | 4040* | 4040* | | | | | 3280* | 3280* | 4.95 |
| 6.0 m | | | 3820* | 3820* | 3900* | 3900* | | | 2780* | 2780* | 6.31 |
| 4.5 m | | | 4470* | 4470* | 4010* | 4010* | | | 2600* | 2600* | 7.10 |
| 3.0 m | | | 5630* | 5630* | 4480* | 4480* | 2610* | 2610* | 2590* | 2590* | 7.50 |
| 1.5 m | | | 6770* | 6770* | 5020* | 4740 | 3510* | 3420 | 2700* | 2700* | 7.58 |
| 0 m | | | 7380* | 7110 | 5370* | 4630 | | | 2980* | 2980* | 7.35 |
| -1.5 m | 9110* | 9110* | 7310* | 7070 | 5300* | 4610 | | | 3530* | 3530* | 6.77 |
| -3.0 m | | | 6380* | 6380* | | | | | | | |

**FRONT BLADE & REAR STABILIZERS UP** - 2-piece boom 5.097 m, arm 2.45 m, 4200 kg counterweight

| | | | | | | | | | | | |
|---|---|---|---|---|---|---|---|---|---|---|---|
| 7.5 m | | | 4040* | 4040* | | | | | 3280* | 3280* | 4.95 |
| 6.0 m | | | 3820* | 3820* | 3900* | 3500 | | | 2780* | 2780* | 6.31 |
| 4.5 m | | | 4470* | 4470* | 4010* | 3450 | | | 2600* | 2600 | 7.10 |
| 3.0 m | | | 5630* | 5060 | 4480* | 3310 | 2610* | 2340 | 2590* | 2340 | 7.50 |
| 1.5 m | | | 6770* | 4730 | 4470 | 3170 | 3220 | 2290 | 2700* | 2260 | 7.58 |
| 0 m | | | 6670 | 4550 | 4360 | 3070 | | | 2980* | 2330 | 7.35 |
| -1.5 m | 9110* | 8440 | 6640 | 4520 | 4340 | 3040 | | | 3530* | 2620 | 6.77 |
| -3.0 m | | | 6380* | 4610 | | | | | | | |

**REAR BLADE DOWN** - 2-piece boom 5.097 m, arm 2.60 m, 4200 kg counterweight

| | | | | | | | | | | | |
|---|---|---|---|---|---|---|---|---|---|---|---|
| 7.5 m | | | 3810* | 3810* | | | | | 3480* | 3480* | 5.15 |
| 6.0 m | | | 3660* | 3660* | 3740* | 3090 | | | 2990* | 2680 | 6.47 |
| 4.5 m | | | 4310* | 4310* | 3900* | 3030 | | | 2830* | 2190 | 7.24 |
| 3.0 m | | | 5480* | 4430 | 4390* | 2890 | 3230 | 2020 | 2820* | 1960 | 7.63 |
| 1.5 m | | | 6660* | 4090 | 4420 | 2740 | 3170 | 1970 | 2950* | 1890 | 7.71 |
| 0 m | | | 6590 | 3900 | 4300 | 2630 | | | 3150 | 1940 | 7.48 |
| -1.5 m | 8880* | 7130 | 6540 | 3850 | 4270 | 2600 | | | 3520 | 2170 | 6.91 |
| -3.0 m | | | 6510* | 3930 | | | | | | | |

**REAR BLADE UP** - 2-piece boom 5.097 m, arm 2.60 m, 4200 kg counterweight

| | | | | | | | | | | | |
|---|---|---|---|---|---|---|---|---|---|---|---|
| 7.5 m | | | 3810* | 3810* | | | | | 3480* | 3480* | 5.15 |
| 6.0 m | | | 3660* | 3660* | 3740* | 2790 | | | 2990* | 2420 | 6.47 |
| 4.5 m | | | 4310* | 4310* | 3900* | 2740 | | | 2830* | 1970 | 7.24 |
| 3.0 m | | | 5480* | 3970 | 4390* | 2600 | 3230 | 1810 | 2820* | 1750 | 7.63 |
| 1.5 m | | | 6660* | 3640 | 4420 | 2450 | 3170 | 1760 | 2950* | 1680 | 7.71 |
| 0 m | | | 6590 | 3460 | 4300 | 2340 | | | 3150 | 1730 | 7.48 |
| -1.5 m | 8880* | 6210 | 6540 | 3410 | 4270 | 2310 | | | 3520 | 1930 | 6.91 |
| -3.0 m | | | 6510* | 3490 | | | | | | | |

* The above loads (kg) are compliant to the ISO standards and refer to the excavator equipped without bucket. The indicated loads are no more than 87% of hydraulic system lift capacity or 75% of static tipping load. Values marked with an asterisk (*) are limited by the hydraulic lifting capacity.

# BUCKETS
## WX175E SR 2-PIECE BOOM

### QUICK COUPLED - ON WHEELS

| Capacity m³ (ISO7451 HEAPED) | Width mm | Weight kg | Arm 2.00 m | Arm 2.45 m 2.60 m |
|---|---|---|---|---|
| **GENERAL PURPOSE BUCKETS** | | | | |
| 0.24 | 450 | 350 | ○ | ○ |
| 0.36 | 600 | 390 | ○ | ○ |
| 0.50 | 750 | 440 | ○ | ● |
| 0.62 | 900 | 480 | ● | ▲ |
| 0.70 | 1000 | 500 | ▲ | ■ |
| 0.78 | 1100 | 540 | ■ | - |

| Capacity m³ (ISO7451 HEAPED) | Width mm | Weight kg | Arm 2.00 m | Arm 2.45 m 2.60 m |
|---|---|---|---|---|
| **HEAVY DUTY BUCKETS** | | | | |
| 0.26 | 450 | 420 | ○ | ○ |
| 0.38 | 600 | 480 | ○ | ○ |
| 0.51 | 750 | 550 | ● | ● |
| 0.65 | 900 | 620 | ▲ | ■ |
| 0.70 | 1000 | 660 | ■ | - |

| Capacity m³ (ISO7451 HEAPED) | Width mm | Weight* kg | Arm 2.00 m | Arm 2.45 m 2.60 m |
|---|---|---|---|---|
| **GRADING BUCKETS** | | | | |
| 0.59 | 1500 | 440 | ▲ | ■ |
| 0.72 | 1800 | 510 | ▲ | ■ |

| Capacity m³ (ISO7451 HEAPED) | Width mm | Weight* kg | Arm 2.00 m | Arm 2.45 m 2.60 m |
|---|---|---|---|---|
| **DITCH CLEANING BUCKETS** | | | | |
| 0.86 | 1830 | 630 | ■ | - |

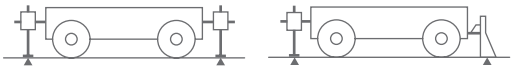

### QUICK COUPLED - STABILIZED

| Capacity m³ (ISO7451 HEAPED) | Width mm | Weight kg | Arm 2.00 m | Arm 2.45 m 2.60 m |
|---|---|---|---|---|
| **GENERAL PURPOSE BUCKETS** | | | | |
| 0.21 | 450 | 350 | ○ | ○ |
| 0.31 | 600 | 390 | ○ | ○ |
| 0.41 | 750 | 440 | ○ | ● |
| 0.52 | 900 | 480 | ● | ▲ |
| 0.58 | 1000 | 500 | ▲ | ■ |
| 0.66 | 1100 | 540 | ▲ | ■ |
| 0.87 | 1200 | 570 | ■ | - |

| Capacity m³ (ISO7451 HEAPED) | Width mm | Weight kg | Arm 2.00 m | Arm 2.45 m 2.60 m |
|---|---|---|---|---|
| **HEAVY DUTY BUCKETS** | | | | |
| 0.26 | 450 | 420 | ○ | ○ |
| 0.38 | 600 | 480 | ○ | ○ |
| 0.51 | 750 | 550 | ○ | ● |
| 0.65 | 900 | 620 | ● | ▲ |
| 0.70 | 1000 | 660 | ▲ | ■ |
| 0.75 | 1050 | 680 | ■ | - |

| Capacity m³ (ISO7451 HEAPED) | Width mm | Weight* kg | Arm 2.00 m | Arm 2.45 m 2.60 m |
|---|---|---|---|---|
| **GRADING BUCKETS** | | | | |
| 0.59 | 1500 | 440 | ● | ▲ |
| 0.72 | 1800 | 510 | ▲ | ■ |
| 0.85 | 2100 | 570 | ■ | - |

| Capacity m³ (ISO7451 HEAPED) | Width mm | Weight* kg | Arm 2.00 m | Arm 2.45 m 2.60 m |
|---|---|---|---|---|
| **DITCH CLEANING BUCKETS** | | | | |
| 0.86 | 1830 | 630 | ■ | ■ |

○ Rated material density up to 2 ton/m³
● Rated material density up to 1.6 ton/m³
▲ Rated material density up to 1.4 ton/m³
■ Rated material density up to 1.2 ton/m³
— Not applicable
* with bolt-on cutting edge

**EXPERTS FOR THE REAL WORLD**
**SINCE 1842**

CASE CONSTRUCTION

# BUILDING A STRONG CASE.

Since 1842, at CASE Construction Equipment we have lived by an unwavering commitment to build practical, intuitive solutions that deliver both efficiency and productivity.

We continually strive to make it easier for our customers to implement emerging technologies and new compliance mandates.

Today, our global scale combined with our local expertise enables us to keep customers' real-world challenges at the center of our product development.

The vast CASE dealers' network is always ready to support and protect your investment and exceed your expectations, while also providing you with the ultimate ownership experience.

Our goal is to build both stronger machines-and stronger communities. At the end of the day, we do what's right for our customers and our communities so that they can count on CASE.

Form No. 20257GB - MediaCross Firenze - 06/23

**CNH Industrial**
Deutschland GmbH
Case Baumaschinen
Benzstr. 1-3 - D-74076 Heilbronn
DEUTSCHLAND

**CNH Industrial**
Maquinaria Spain, S.A.
Avenida Aragón 402
28022 Madrid - ESPAÑA

**CNH Industrial France, S.A.**
16-18 Rue des Rochettes
91150 Morigny-Champigny
FRANCE

**CNH Industrial Italia Spa**
Lungo Stura Lazio 19
10156, Torino
ITALIA

**CASE Construction Equipment**
Cranes Farm Rd
Basildon - SS14 3AD
UNITED KINGDOM

NOTE: Standard and optional fittings can vary according to the demands and specific regulations of each country. The illustrations may include optional rather than standard fittings - consult your Case dealer. Furthermore, CNH Industrial reserves the right to modify machine specifications without incurring any obligation relating to such changes.

Conforms to directive 2006/42/EC

**CASECE.COM**
**00800-2273-7373**

The call is free from a land line.
Check in advance with your Mobile Operator if you will be charged. Toll free number not available from all calling areas.